PRODUCT DATA SHEET

CKP-302/6-ED

Fin spacing 6 mm

TECHNICAL DATA

Cooling capacity R404A/507 (te= -8^{0}C ; DT1=8K):	3,70 kW
Cooling capacity R404A/507 (te= -25^{0}C; DT1=7K):	2,70 kW
Exchange surface:	15,0 m^2
Tube volume:	4,3 dm^3
Air flow:	3980 m^3/h
Air throw:	7 m
Gas coil connection:	22 Φ mm
Liquid coil connection:	12 Φ mm
Weight:	30 kg

FANS

Diameter:	300 Φ mm
Number of fans:	2
Voltage:	230/50 V/Hz
Power:	210 W
Current:	0,88 A

ELECTRIC DEFROST

Voltage:	230/50 V/Hz
Coil block:	3x730 W
Drip tray:	1x730 W
Total:	2920 W

CKP-302/6-ED

Fin spacing 6 mm

THE CORRECTION FACTORS

Tevap [°C] / DT1[K]	13	12	11	10	9	8	7	6
5	-	2,146	1,904	1,592	1,361	1,228	1,195	1,010
4	-	2,077	1,835	1,558	1,355	1,201	1,160	0,972
3	2,250	1,973	1,800	1,542	1,340	1,179	1,127	0,946
2	2,181	1,965	1,766	1,527	1,316	1,140	0,999	0,912
1	2,146	1,938	1,731	1,515	1,281	1,108	0,969	0,885
0	2,110	1,911	1,662	1,488	1,261	1,073	0,935	0,854
-5	1,835	1,696	1,488	1,350	1,177	1,013	0,865	0,727
-8	1,627	1,523	1,350	1,246	1,073	1,000	0,806	0,692
-10	1,590	1,498	1,340	1,202	1,011	0,935	0,794	0,673
-15	-	1,385	1,246	1,142	1,004	0,865	0,762	0,658
-20	-	1,246	1,142	1,038	0,935	0,831	0,748	0,623
-25	-	-	1,038	0,935	0,865	0,765	0,720	0,588
-30	-	-	-	0,900	0,796	0,727	0,623	0,544
-35	-	-	-	0,831	0,727	0,658	0,588	0,519

DIMENSIONS

A:	1094 mm
B:	440 mm
C:	420 mm
D:	812 mm

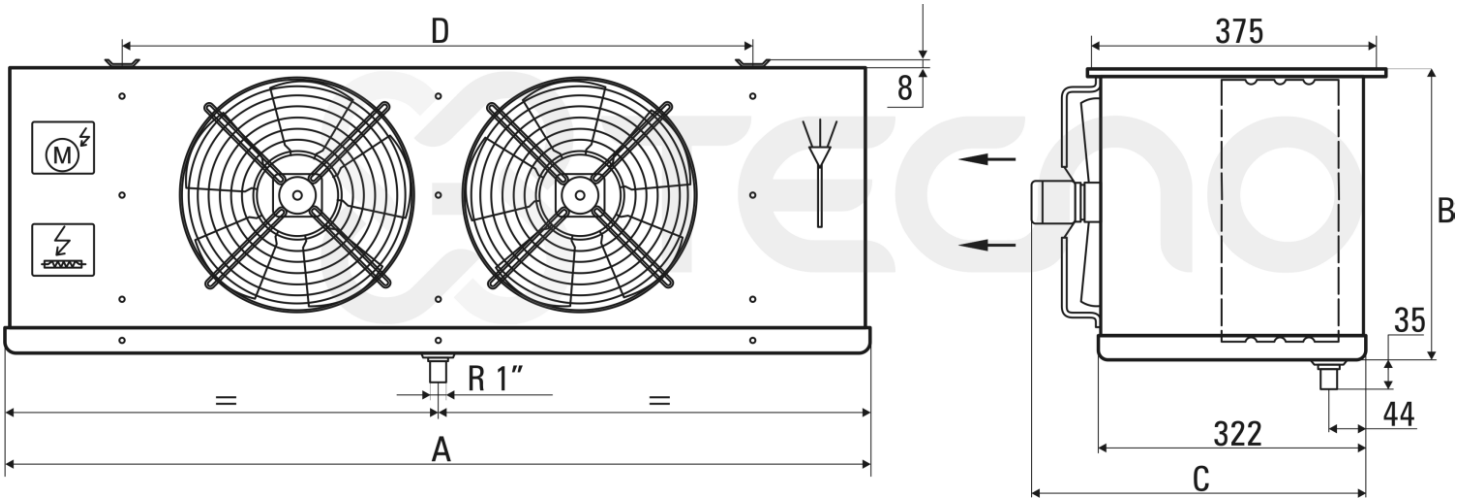

CKP-302/6-ED

Fin spacing 6 mm

SAMPLE PICTURES

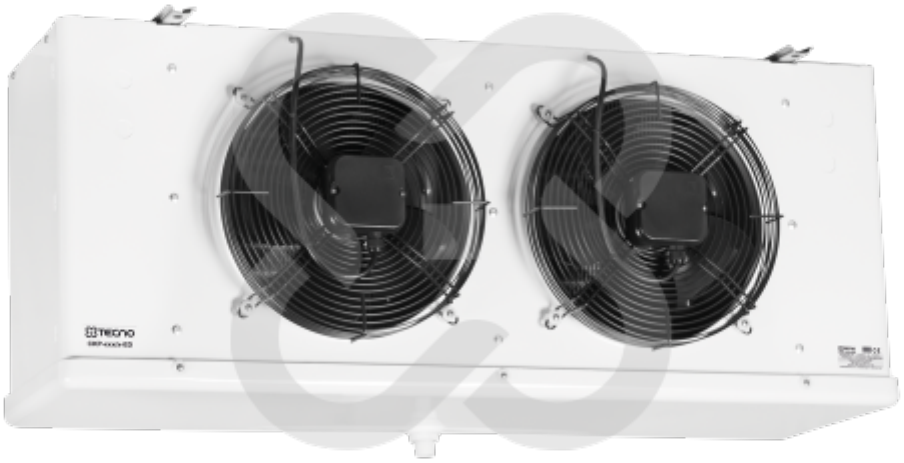

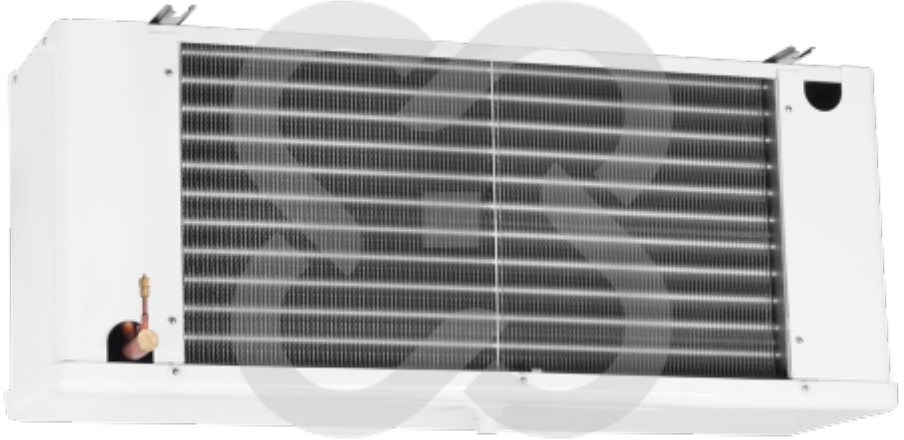

Pictures of some products may vary. Every effort was made to information contained in this catalog are correct. Due to the constant technological developments reserves the right to make changes without notice.