**PRODUCT DATA SHEET**

# CKP-252/6-ED

Fin spacing 6 mm

## TECHNICAL DATA

| | |
|---|---|
| Cooling capacity R404A/507 ( te= -8$^0$C ; DT1=8K): | 2,55 kW |
| Cooling capacity R404A/507 (te= -25$^0$C; DT1=7K): | 1,85 kW |
| Exchange surface: | 11,0 $m^2$ |
| Tube volume: | 3,2 $dm^3$ |
| Air flow: | 2100 $m^3$/h |
| Air throw: | 6 m |
| Gas coil connection: | 19 Φ mm |
| Liquid coil connection: | 12 Φ mm |
| Weight: | 23 kg |

## FANS

| | |
|---|---|
| Diameter: | 250 Φ mm |
| Number of fans: | 2 |
| Voltage: | 230/50 V/Hz |
| Power: | 120 W |
| Current: | 0,48 A |

## ELECTRIC DEFROST

| | |
|---|---|
| Voltage: | 230/50 V/Hz |
| Coil block: | 2x730 W |
| Drip tray: | 1x730 W |
| Total: | 2190 W |

# CKP-252/6-ED

Fin spacing 6 mm

## THE CORRECTION FACTORS

| Tevap [°C] / DT1[K] | 13 | 12 | 11 | 10 | 9 | 8 | 7 | 6 |
|---|---|---|---|---|---|---|---|---|
| 5 | - | 2,146 | 1,904 | 1,592 | 1,361 | 1,228 | 1,195 | 1,010 |
| 4 | - | 2,077 | 1,835 | 1,558 | 1,355 | 1,201 | 1,160 | 0,972 |
| 3 | 2,250 | 1,973 | 1,800 | 1,542 | 1,340 | 1,179 | 1,127 | 0,946 |
| 2 | 2,181 | 1,965 | 1,766 | 1,527 | 1,316 | 1,140 | 0,999 | 0,912 |
| 1 | 2,146 | 1,938 | 1,731 | 1,515 | 1,281 | 1,108 | 0,969 | 0,885 |
| 0 | 2,110 | 1,911 | 1,662 | 1,488 | 1,261 | 1,073 | 0,935 | 0,854 |
| -5 | 1,835 | 1,696 | 1,488 | 1,350 | 1,177 | 1,013 | 0,865 | 0,727 |
| -8 | 1,627 | 1,523 | 1,350 | 1,246 | 1,073 | 1,000 | 0,806 | 0,692 |
| -10 | 1,590 | 1,498 | 1,340 | 1,202 | 1,011 | 0,935 | 0,794 | 0,673 |
| -15 | - | 1,385 | 1,246 | 1,142 | 1,004 | 0,865 | 0,762 | 0,658 |
| -20 | - | 1,246 | 1,142 | 1,038 | 0,935 | 0,831 | 0,748 | 0,623 |
| -25 | - | - | 1,038 | 0,935 | 0,865 | 0,765 | 0,720 | 0,588 |
| -30 | - | - | - | 0,900 | 0,796 | 0,727 | 0,623 | 0,544 |
| -35 | - | - | - | 0,831 | 0,727 | 0,658 | 0,588 | 0,519 |

## DIMENSIONS

| | |
|---|---|
| A: | 1094 mm |
| B: | 338 mm |
| C: | 420 mm |
| D: | 812 mm |

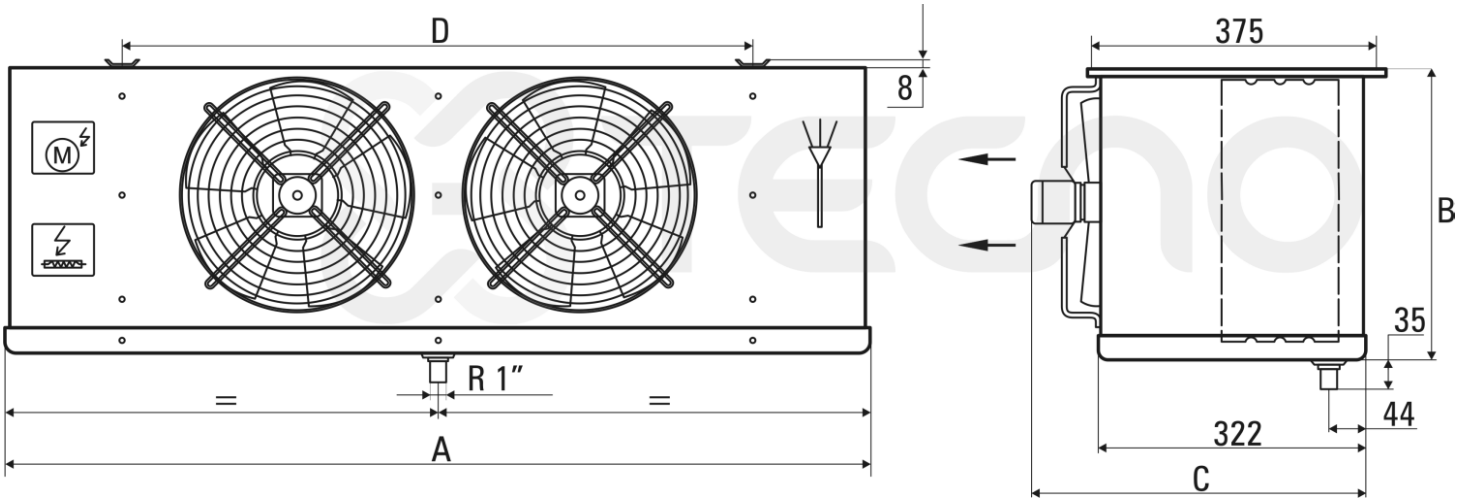

# CKP-252/6-ED

Fin spacing 6 mm

## SAMPLE PICTURES

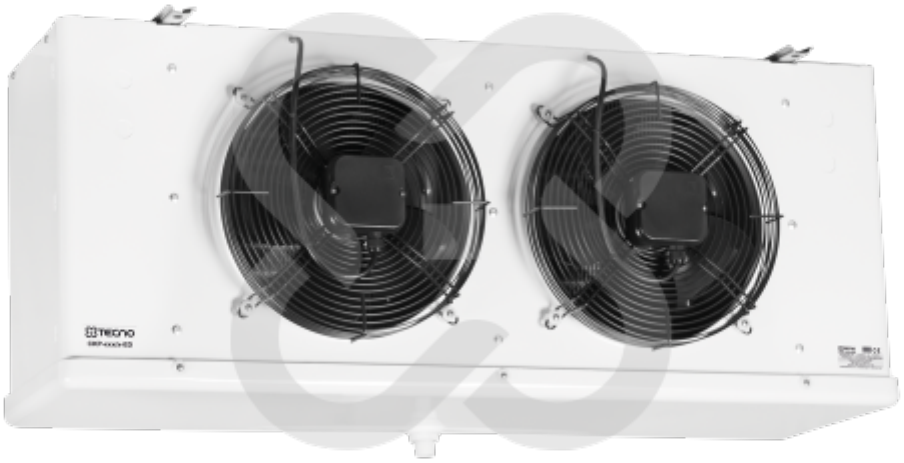

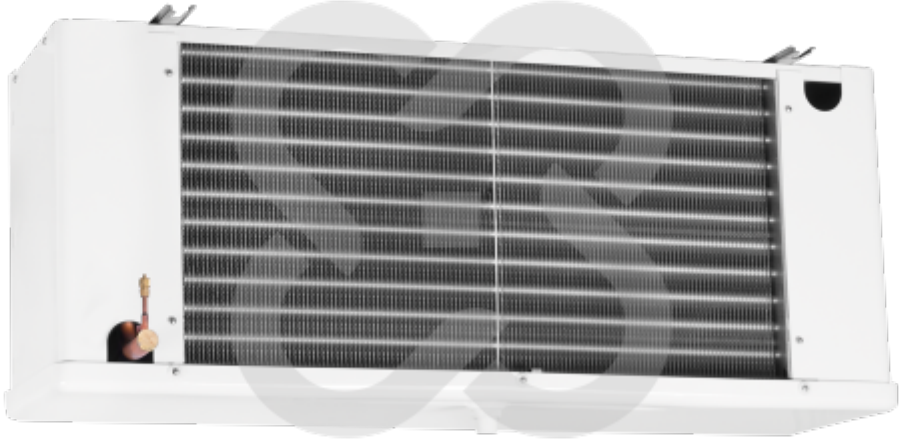

Pictures of some products may vary. Every effort was made to information contained in this catalog are correct. Due to the constant technological developments reserves the right to make changes without notice.