PRODUCT DATA SHEET

CPU-203/P-ED

Fin spacing 6,4 / 3,2 mm

TECHNICAL DATA

Cooling capacity R404A/507 (te= -8^{0}C ; DT1=8K):	1,80 kW
Exchange surface:	8,6 m^2
Tube volume:	2,5 dm^3
Air flow:	1440 m^3/h
Air throw:	4 m
Gas coil connection:	1/2 Φ mm
Liquid coil connection:	1/2 Φ mm
Weight:	13 kg

FANS

Diameter:	200 Φ mm
Number of fans:	3
Voltage:	230/50 V/Hz
Power:	93 W
Current:	0,69 A

ELECTRIC DEFROST

Voltage:	230/50 V/Hz
Coil block:	1x1200 W
Total:	1200 W

CPU-203/P-ED

Fin spacing 6,4 / 3,2 mm

THE CORRECTION FACTORS

Tevap [°C] / DT1[K]	14	13	12	11	10	9	8	7	6
5	2,375	2,247	2,118	1,861	1,669	1,348	1,123	0,963	0,745
4	2,356	2,227	2,093	1,842	1,637	1,329	1,114	0,937	0,741
3	2,336	2,208	2,067	1,823	1,605	1,309	1,104	0,911	0,738
2	2,324	2,195	2,028	1,810	1,585	1,297	1,091	0,892	0,729
1	2,311	2,182	1,990	1,797	1,566	1,284	1,078	0,873	0,719
0	2,279	2,150	1,926	1,733	1,521	1,236	1,046	0,854	0,700
-5	2,247	2,118	1,861	1,669	1,476	1,188	1,014	0,834	0,680
-8	2,215	2,054	1,829	1,637	1,412	1,155	1,000	0,818	0,677
-10	2,182	1,990	1,797	1,605	1,348	1,123	0,976	0,802	0,674
-15	-	1,894	1,701	1,508	1,284	1,075	0,937	0,786	0,658
-20	-	1,797	1,605	1,412	1,220	1,027	0,899	0,770	0,642
-25	-	-	1,541	1,348	1,171	0,998	0,884	0,730	0,629
-30	-	-	-	-	1,123	0,969	0,868	0,700	0,602
-35	-	-	-	-	-	0,940	0,834	0,678	0,542

DIMENSIONS

A:	1060 mm
B:	160 mm
C:	365 mm
D:	450 mm

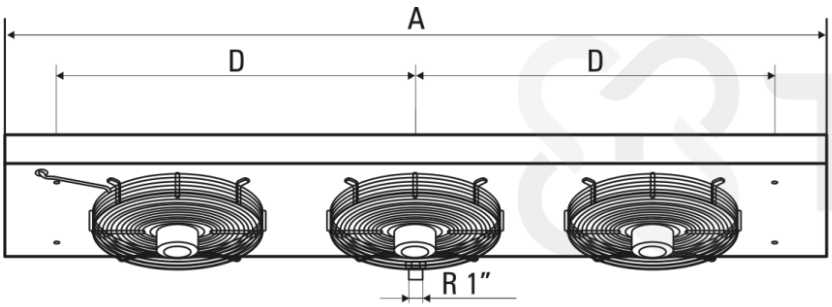

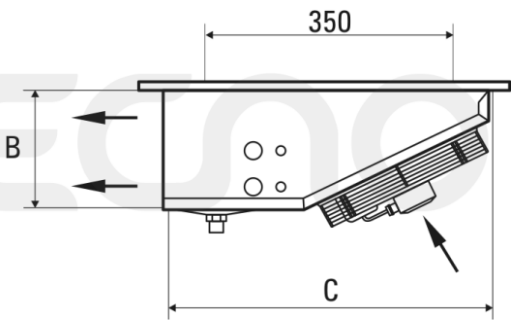

CPU-203/P-ED

Fin spacing 6,4 / 3,2 mm

SAMPLE PICTURES





Pictures of some products may vary. Every effort was made to information contained in this catalog are correct. Due to the constant technological developments reserves the right to make changes without notice.