PRODUCT DATA SHEET

CVD-122-1,91/4,5

Fin spacing 4,5 mm

TECHNICAL DATA

Cooling capacity R404A/507 (te= -8^{0}C ; DT1=10K):	660 W
Exchange surface:	1,91 m^2
Tube volume:	0,59 dm^3
Air flow:	322 m^3/h
Air throw:	1,83 m
Gas coil connection:	9,52 Φ mm
Liquid coil connection:	9,52 Φ mm
Weight:	3,8 kg

FANS

Diameter:	120 Φ mm
Number of fans:	2
Voltage:	230/50 V/Hz
Power:	40 W
Current:	0,26 A

CVD-122-1,91/4,5

Fin spacing 4,5 mm

THE CORRECTION FACTORS

Tevap.[°C] / DT1[K]	14	13	12	11	10	9	8	7	6
5	1,594	1,558	1,451	1,308	1,166	0,987	0,808	0,630	0,523
4	1,587	1,544	1,444	1,295	1,143	0,966	0,801	0,624	0,519
3	1,580	1,529	1,437	1,280	1,120	0,944	0,794	0,618	0,516
2	1,572	1,515	1,430	1,265	1,097	0,923	0,787	0,613	0,512
1	1,565	1,501	1,423	1,251	1,074	0,901	0,780	0,607	0,509
0	1,558	1,487	1,416	1,237	1,051	0,880	0,773	0,601	0,505
-5	1,523	1,434	1,427	1,166	1,019	0,855	0,732	0,580	0,487
-8	1,501	1,402	1,313	1,123	1,000	0,840	0,707	0,567	0,476
-10	1,487	1,380	1,237	1,094	0,987	0,830	0,691	0,558	0,469
-15	-	1,309	1,178	1,041	0,961	0,795	0,672	0,551	0,461
-20	-	1,237	1,118	0,987	0,934	0,763	0,652	0,544	0,454
-25	-	-	1,058	0,951	0,907	0,731	0,633	0,537	0,448
-30	-	-	-	-	0,880	0,699	0,613	0,530	0,440
-35	-	-	-	-	-	0,666	0,594	0,523	0,433

DIMENSIONS

A:	390 mm
B:	405 mm
C:	368 mm
D:	406 mm
E:	80 mm
F:	120 mm

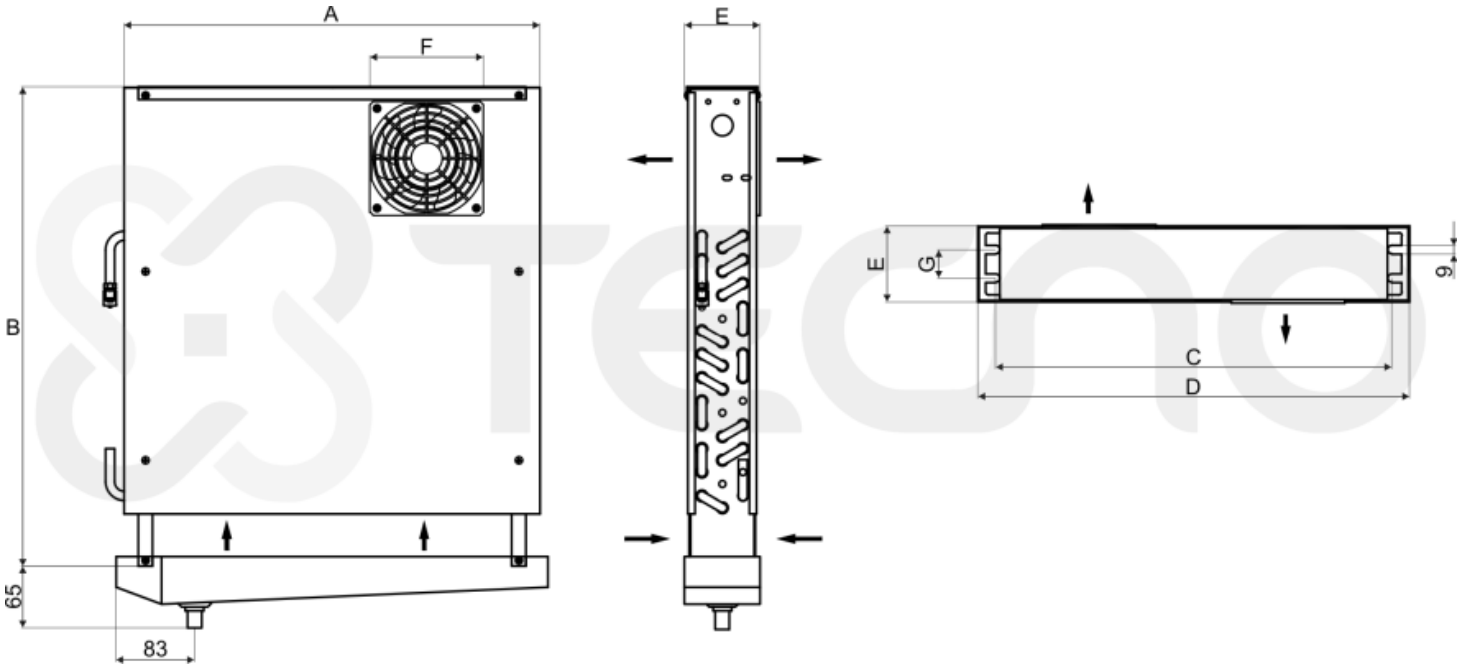
A
F
E
B
65
83
E
G
9
C
D

CVD-122-1,91/4,5

Fin spacing 4,5 mm

SAMPLE PICTURES



Pictures of some products may vary. Every effort was made to information contained in this catalog are correct. Due to the constant technological developments reserves the right to make changes without notice.