PRODUCT DATA SHEET

iCKP-634/7-ED

Fin spacing 7 mm

TECHNICAL DATA

Cooling capacity R404A/507 (te= -8^{0}C ; DT1=8K):	74,40 kW
Cooling capacity R404A/507 (te= -25^{0}C; DT1=7K):	56,40 kW
Exchange surface:	500,0 m^2
Tube volume:	123,5 dm^3
Air flow:	40200 m^3/h
Air throw:	26 m
Gas coil connection:	2x54 Φ mm
Liquid coil connection:	2x22 Φ mm
Weight:	658 kg

FANS

Diameter:	630 Φ mm
Number of fans:	4
Voltage:	400/50 V/Hz
Power:	2720 W
Current:	7,36 A

ELECTRIC DEFROST

Voltage:	230/50 V/Hz
Coil block:	14x2530 W
Drip tray:	4x2530W
Total:	45540 W

iCKP-634/7-ED

Fin spacing 7 mm

THE CORRECTION FACTORS

Tevap [°C] / DT1[K]	13	12	11	10	9	8	7	6
5	-	2,142	1,770	1,528	1,304	1,155	1,025	0,950
4	-	2,068	1,732	1,509	1,285	1,136	1,006	0,931
3	2,235	1,993	1,695	1,490	1,267	1,118	0,987	0,913
2	2,187	1,926	1,658	1,453	1,248	1,099	0,969	0,876
1	2,142	1,863	1,621	1,416	1,230	1,080	0,950	0,857
0	2,049	1,770	1,583	1,379	1,211	1,062	0,931	0,838
-5	1,770	1,602	1,453	1,304	1,155	1,006	0,876	0,820
-8	1,490	1,434	1,323	1,267	1,118	1,000	0,848	0,798
-10	-	-	-	1,230	1,080	0,950	0,820	0,777
-15	-	-	-	1,136	1,043	0,913	0,794	0,740
-20	-	-	-	1,043	1,006	0,876	0,764	0,702
-25	-	-	-	-	0,931	0,838	0,758	0,665
-30	-	-	-	-	0,876	0,801	0,740	0,635
-35	-	-	-	-	-	0,764	0,721	0,609

DIMENSIONS

A:	5365 mm
B:	945 mm
C:	820 mm
D:	4920 mm
E:	1230 mm

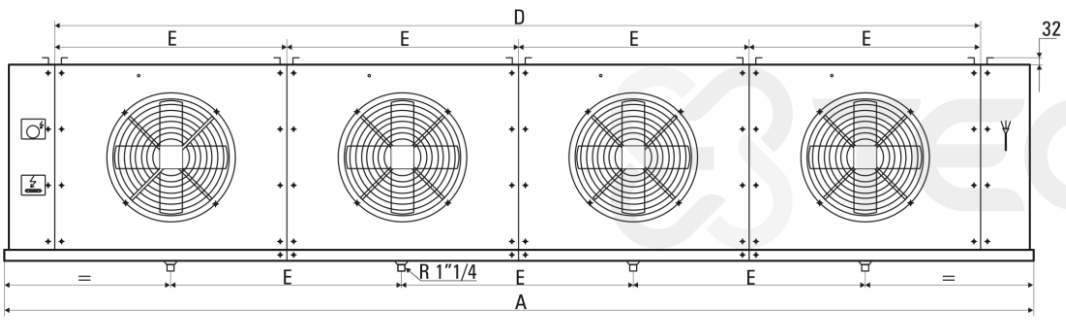

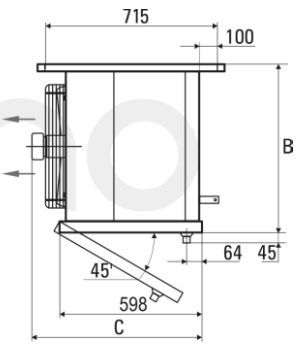

SAMPLE PICTURES

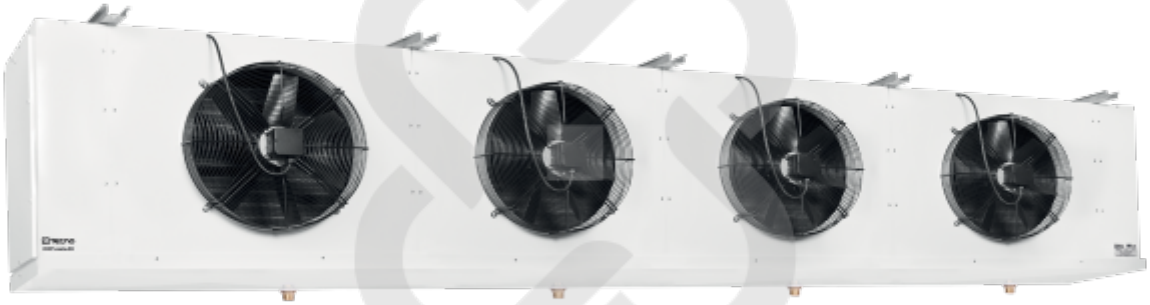



Pictures of some products may vary. Every effort was made to information contained in this catalog are correct. Due to the constant technological developments reserves the right to make changes without notice.